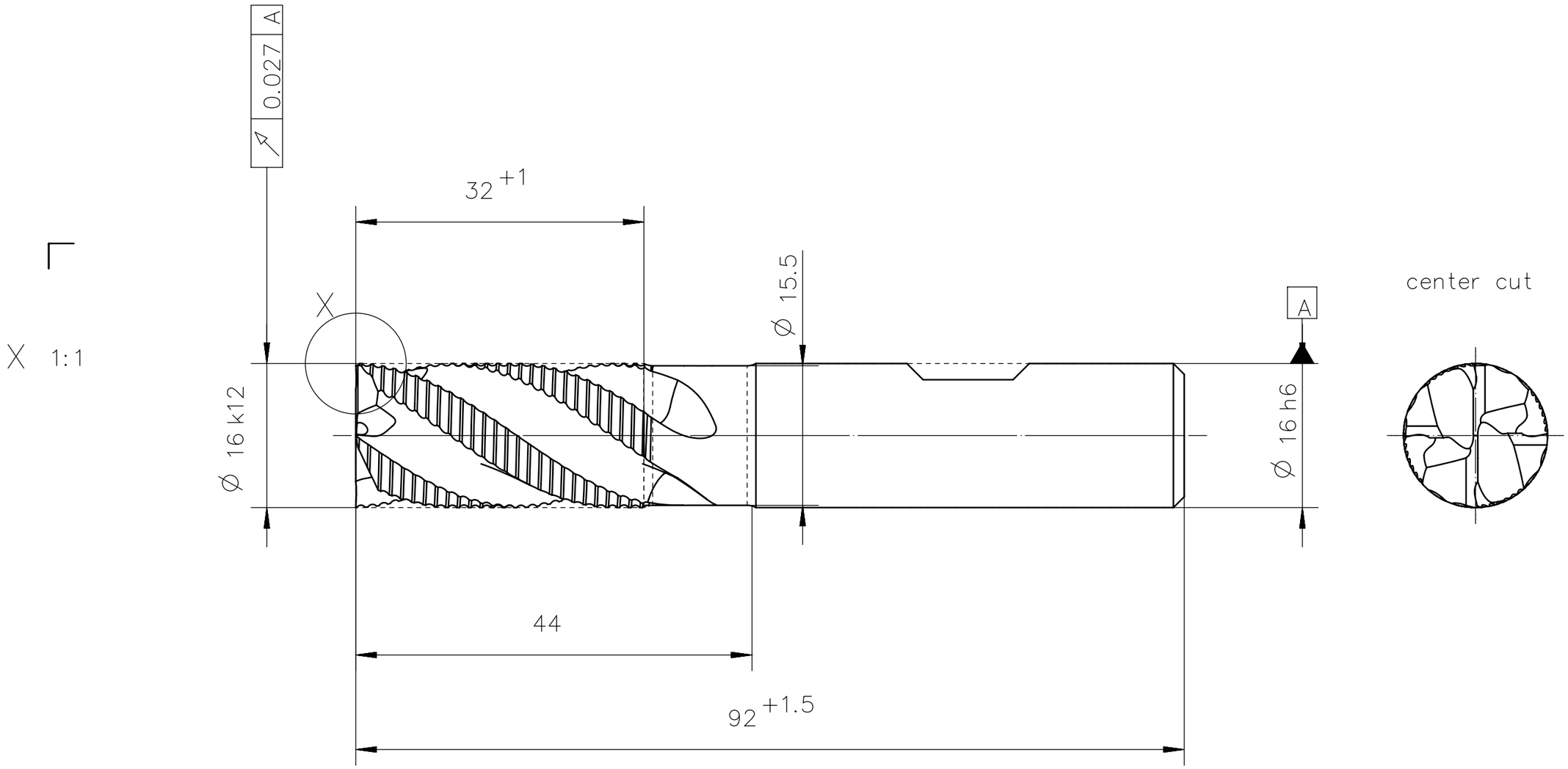

Characteristics:	
Number of teeth	4
Cutting direction	right
Spiral direction	right
Spiral angle	30+5
Type of face	center cut
Type of shank	DIN 6535 HB

Qty.	Description	Det.	Dwg. No.	Material

Proprietary Information DIN ISO 16016:2002–5

We reserve all Rights to this drawing including for the purpose of issueing patents and registration of petty patents. Without our written consent this drawing may not be copied, whole or partially, and may not be misused by the recipient as well as third parties. Any infraction will result in compensation for occured damages and could lead to legal action by the author.

	Date	Name
Drawn	14.02.13	PROTOTYP
Checked		

WALTER PROTOTYP

Rev.	Revision	Date	Name

Cust. No.:

Scale: 2:1 Format: A3

Material: HSS–E–PM

Surface: ACN

Description:

Protostar

HRA KORDEL F35 16 x 32

Drawing–No.: 1P3120217–5074058 D10

Ord.–Code: P3120217–16